User instructions for the OPTOGATE Mic–Lift

Description

The Mic Lift motorised adapter solves one of the most common problems in conference applications, that of getting the microphone at the optimum height for both acoustic performance and visual appearance. It can be mounted on a microphone stand and gives the engineer the ability to change the height of a microphone remotely. The unit is clamped to the lower section of a mic stand (just below the locking sleeve) and two small electric motors power rubber wheels that grip the inner section of the stand and raise or lower it as required. The unit is controlled by a supplied remote control, which uses an XLR 3-pin connector. This can be extended as required using 2-core screened mic cable or via a channel in a multi-core stage cable. The unit is powered by eight AA size batteries mounted internally, or by a 12V DC external supply. It is designed to operate with K&M microphone stands. However, units can be manufactured to special order to suit stands from other suppliers if required.

Installation

Decide whether the unit is to be powered by batteries or an external AC power supply.

Battery Powering:

On the front is the battery box. The cover is fastened with 2 cross-head screws. Remove the cover and insert 8 AA type batteries – ensuring correct orientation. Replace the cover.

External AC powering:

Connect a suitable 9-12V supply, capable of delivering at least 1A, to the phoenix connector supplied. Be careful when connecting the wiring as there are no polarity markings. The upper terminal should be connected to the negative side of the supply and the lower terminal to the positive.

Fitting unit to the microphone stand

Always lock off the central stem of the stand before fixing the Mic Lift. Using the two wing nuts and clamp attach the Mic Lift to the stand just below the clamping sleeve. The rubber wheels need to touch the central stem. Remember to loosen the stem after fixing the Mic Lift. Ensure the lower rubber wheel does not touch the clamping sleeve. A 6mm hex key may be required to clamp the Mic lift securely.

Mount the mic cable guide on the back of the Mic Lift using either of the two raised screws as a fixing point. Use of the guide will prevent the possible rotation of the mic to the left or the right – depending on the drag of the cable. The cable guide may not be required if the Mic Lift is to be used on a table. Please take care that the stand is exact in a vertical position. A not exact vertical position might result in a left or right rotation of the mic – depending of the deepest point and the weight of the mic.

Local Operation

The Mic Lift adapter is switched on by pushing the slide switch on the side panel to its upper position. The LED between the two blue control buttons will flash 3 times.
The stand may be raised by pushing the upper blue button and lowered using the lower button. Ensure that clothing, fingers, etc., do not come into contact with the stand or rotating wheels and that the mic clamp does not damage the upper wheel when the stand is being lowered.

Remote Operation

On the underside of the Mic Lift is a 3-pin male XLR connector. Into this can be connected the supplied remote control unit. The mic stand may be raised and lowered using the two pushbuttons. A red LED will illuminate if the Mic Lift is powered. The cable may be extended using a standard mic lead.

Remote control connections

An alternative control box could be fashioned if required.

XLR Pin configuration is as follows:

Pin 1: Ground
Pin 2: Control “up”
Pin 3: Control “down”

Shorting pin 2 to pin 1 allows the mic to be raised and shorting pin 3 to pin 1 allows the mic to be lowered.

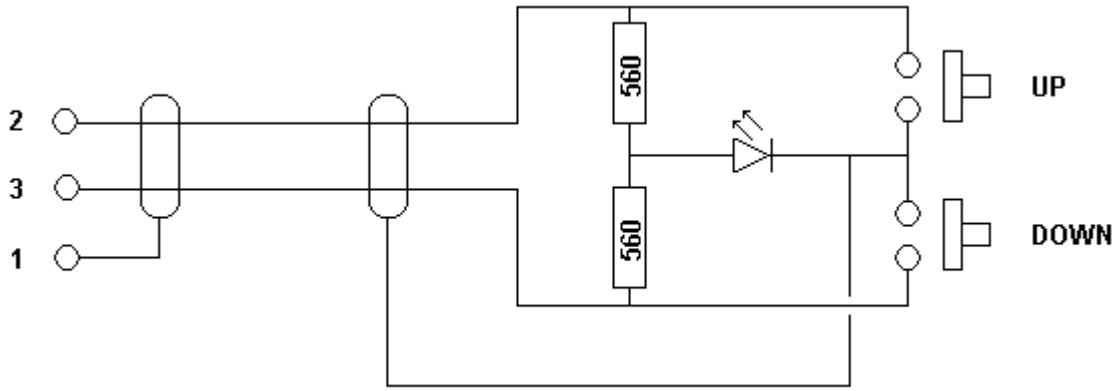

Mic Lift Remote Wiring.

If a good quality cable is used then distances of up to 150m are feasible.

General points to observe

Ensure that all users of the Mic Lift are familiar with its operational requirements and the environment in which it is to be used.
The operator must have a good view of the mic lift and stand at all times.

Included accessories:

Remote control
Mic cable guide

Technical Specifications:

Dimensions: 60 x 120 x 92 (w x h x d) mm, excluding cable guide
Connectors: XLR 3-pin for remote control
Phoenix for DC supply
Motor noise: +44 dB(A) at 1 metre distance when motors working
Remote control type: Passive, supplied with 2 metre cable and 3 pin XLR 3 - pin male connector
Maximum cable distance: 150 metres approximately
Powering: 1) Eight AA size batteries
2) 9-12V external supply via phoenix connector
Current consumption: 1A approx. when motors working, 8mA standby
Case material: Aluminium
Weight: 1.2kg approx.

Warranty: 2 years

The Mic Lift devices are registered as B2B devices and conform to the CE and ROHS regulations for the European market.